Quality Metals, Inc.
Architectural Metal Products
201 Gordon Street, Sanford, FL 32771

L. F. SCHMIDT LICENSE No. 43409 STATE OF FLORIDA PROFESSIONAL ENGINEER

Digitally signed by Lyndon F Schmidt
Date: 2026.07.02 13:58:36 -04'00'

This item has been digitally signed and sealed by **L. F. Schmidt, P.E.** on the date adjacent to the seal.
Printed copies of this document are not considered signed and sealed and the signature must be verified on any electronic copies.

THIS PRODUCT APPROVAL IS VALID ONLY FOR THE STATE OF FLORIDA

ACM WALL PANELS (WET SEAL)

"NON-IMPACT"

GENERAL NOTES

1. This product has been evaluated and is in compliance with the 9th Edition (2026) Florida Building Code (FBC) structural requirements excluding the "High Velocity Hurricane Zone" (HVHZ).
2. When used in areas requiring wind borne debris protection, this product is required to be protected with an impact resistant covering that complies with FBC Sections 1609.1.2 & R301.2.1.2.
3. Site conditions that deviate from the details of this drawing require further engineering analysis by a licensed engineer or registered architect.
4. The wall panels are shown (as tested) attached to 16 ga. metal studs at a maximum stud spacing of 16" o.c. The metal studs are part of the support structure and shall be designed by the architect or engineer of record and submitted to the permitting jurisdiction for review and approval. The wall panels may also be attached directly to other substrate materials as specified by the architect or engineer of record.
5. The wall panels shall not be used to resist diaphragm forces. Supplemental lateral bracing required.
6. The wall panels shall not be used to resist any axial forces other than self-weight. Supplemental vertical support for floor and roof systems is required.

TABLE OF CONTENTS

SHEET#	DESCRIPTION
1	Typical elevations, design pressures & general notes
2	Horizontal cross sections
3	Vertical cross sections
4	Panel details
5	Bill of materials and components

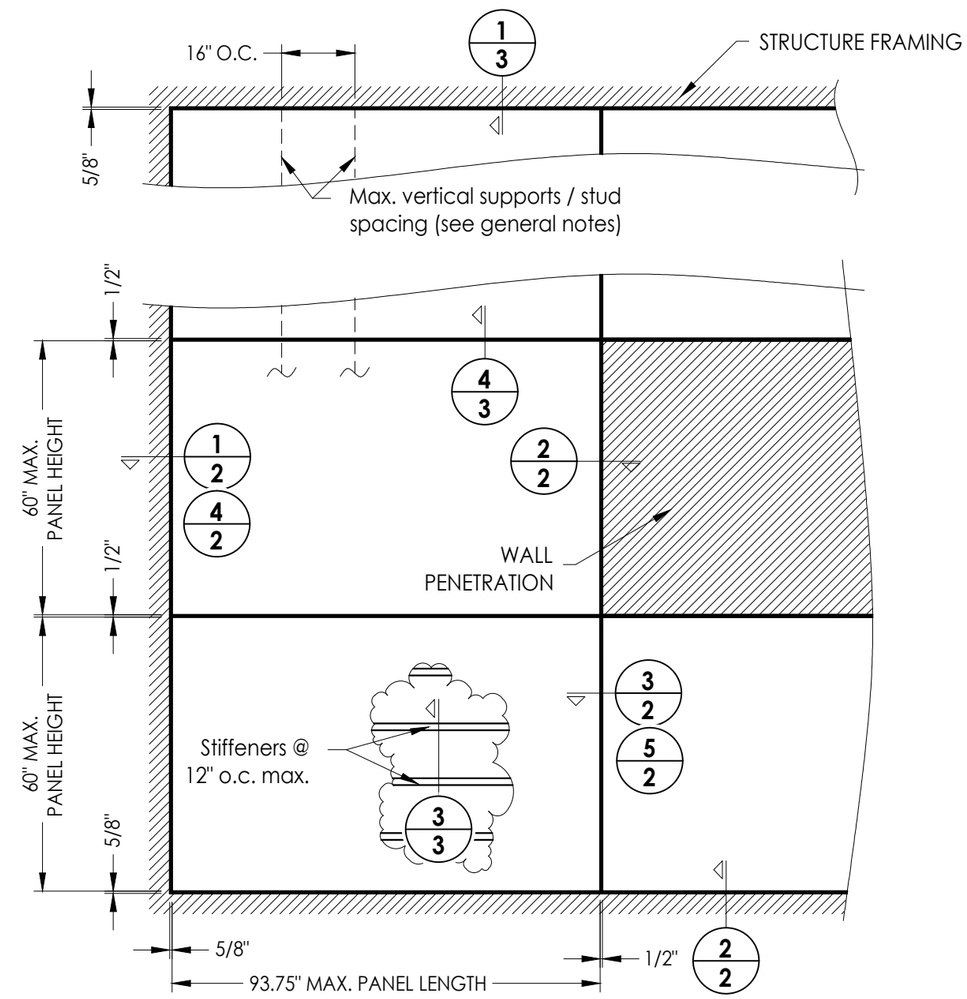

MAX. PANEL DIMENSION	STIFFENER SPACING	DESIGN PRESSURE (PSF)	
		POSITIVE	NEGATIVE
60.0" x 93.75"	12" O.C.	+40.0	-40.0

Documents Prepared By:
Lyndon F. Schmidt
P.E. No. 43409

RW BUILDING CONSULTANTS, INC.
P.O. Box 230, Valrico, FL 33595
Phone No.: 813.659.9197
FBPE Registry No. 9813

PRODUCT: QUALITY METALS, INC.

PART OR ASSEMBLY: TYPICAL ELEVATION, DESIGN PRESSURES & GENERAL NOTES

NO.	DATE	REVISIONS	BY
5	7/02/26	UPDATE TO 9TH ED. (2026) FBC	LFS
4	8/08/23	UPDATE TO 8TH ED. (2023) FBC	LFS
3	8/27/20	UPDATE TO 7TH ED. (2020) FBC	LFS
2	7/20/17	UPDATE TO 6TH ED. (2017) FBC	LFS
1	2/12/15	UPDATE TO 5TH ED. (2014) FBC	LFS

DATE: 2/18/14
SCALE: N.T.S.
DWG. BY: JK
CHK. BY: LFS
DRAWING NO.: FL-16849.2
SHEET 1 OF 5

© 2014 R.W. BUILDING CONSULTANTS INC.

Z:\2023 FBC Drawings\Quality Metals, Inc\FL-16849 R5\FL-16849.1-2.dwg

NOTE:

1. SPACING FOR ITEM #11:
   60" PANEL: 2" FROM ENDS & 14" O.C. (5 TOTAL)
   36" PANEL: 2" FROM ENDS & 16" O.C. (3 TOTAL)
   25" PANEL: 2" FROM ENDS (2 TOTAL)

2. SPACING FOR ITEM #1:
   60" PANEL: 1" & 4" FROM ENDS & 13" O.C. (7 TOTAL)
   36" PANEL: 1" & 4" FROM ENDS & 14" O.C. (5 TOTAL)
   25" PANEL: 1" & 4" FROM ENDS & 8.5" O.C. (5 TOTAL)

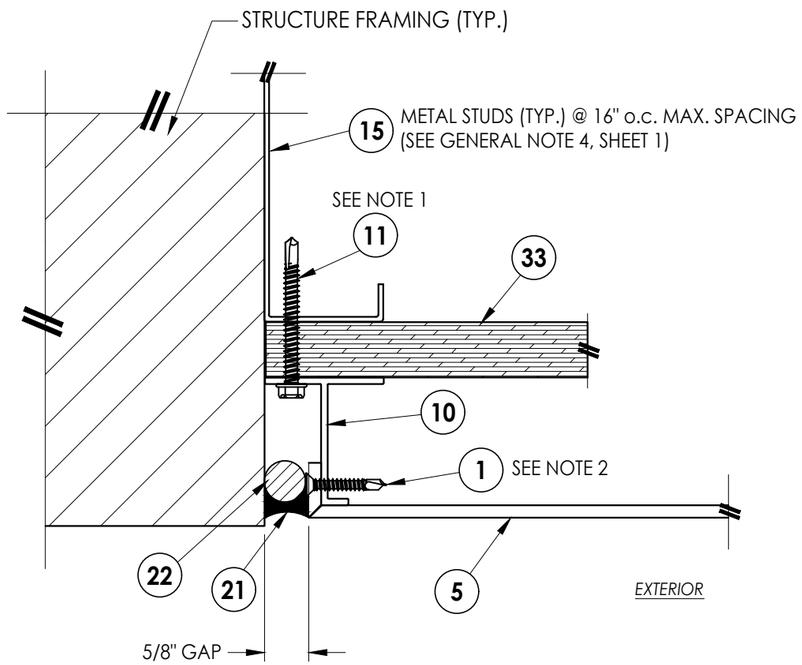

1/2 HORIZONTAL CROSS SECTION

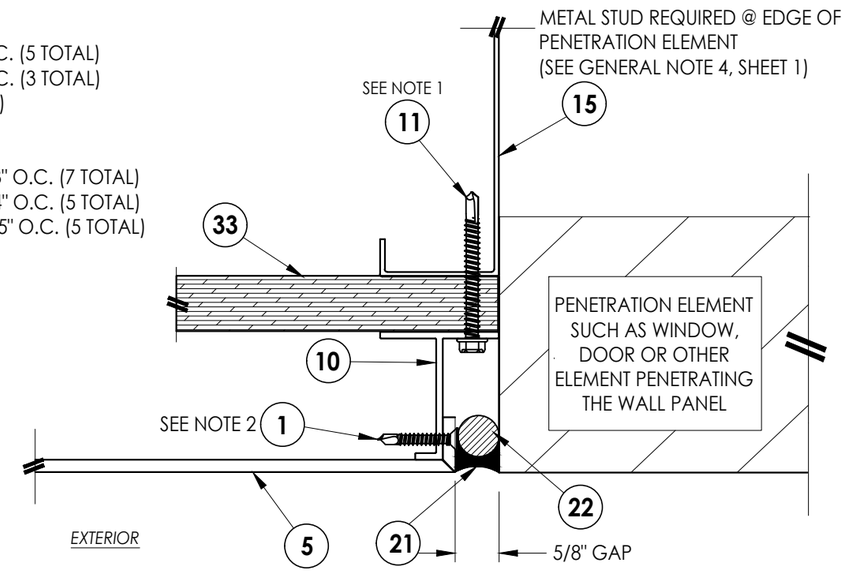

2/2 HORIZONTAL CROSS SECTION

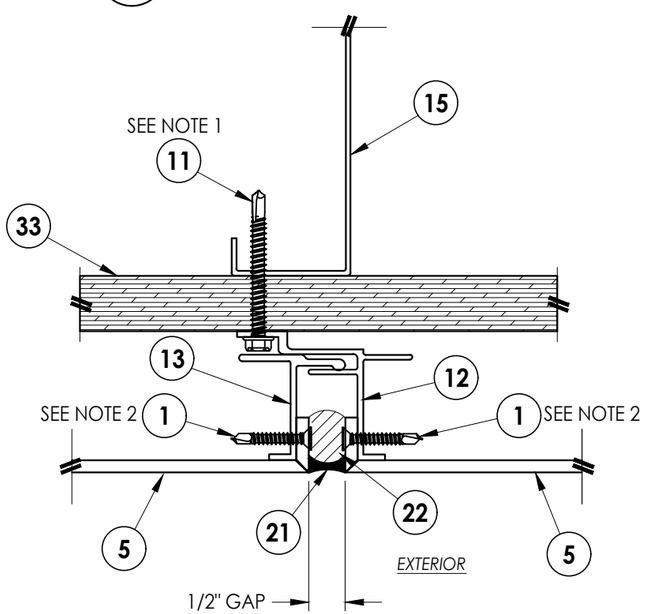

3/2 HORIZONTAL CROSS SECTION

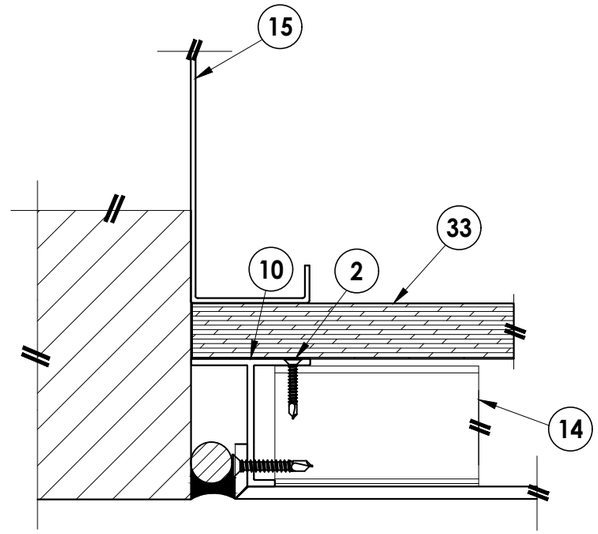

4/2 HORIZONTAL CROSS SECTION
STIFFENER AT EXTERIOR JOINT

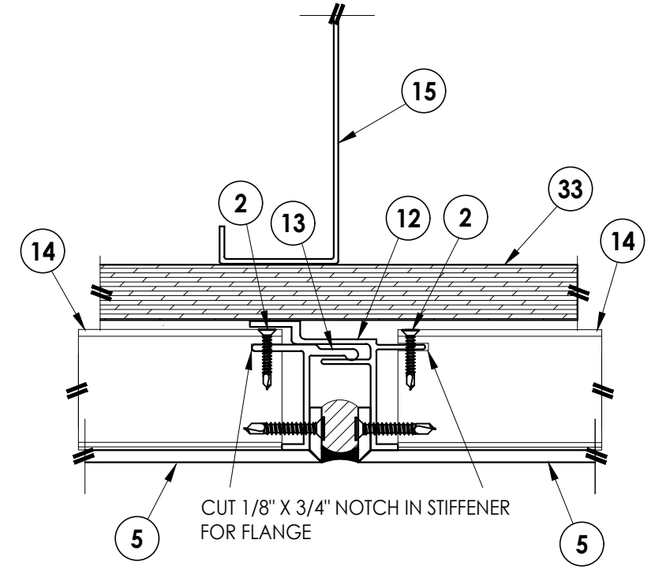

5/2 HORIZONTAL CROSS SECTION
STIFFENER AT INTERIOR JOINT

Z:\2023 FBC Drawings\Quality Metals, Inc\FL-16849 R5\FL-16849.1-2.dwg

Documents Prepared By:
Lyndon F. Schmidt
P.E. No. 43409

RW BUILDING CONSULTANTS, INC.
P.O. Box 230, Valrico, FL 33595
Phone No.: 813.659.9197
FBPE Registry No. 9813

PRODUCT: QUALITY METALS, INC.

PART OR ASSEMBLY: HORIZONTAL CROSS SECTIONS

NO.	DATE	REVISIONS	BY
5	7/02/26	UPDATE TO 9TH ED. (2026) FBC	LFS
4	8/08/23	UPDATE TO 8TH ED. (2023) FBC	LFS
3	8/27/20	UPDATE TO 7TH ED. (2020) FBC	LFS
2	7/20/17	UPDATE TO 6TH ED. (2017) FBC	LFS
1	2/12/15	UPDATE TO 5TH ED. (2014) FBC	LFS

DATE: 2/18/14
SCALE: N.T.S.
DWG. BY: JK
CHK. BY: LFS
DRAWING NO.: FL-16849.2
SHEET 2 OF 5

© 2014 R.W. BUILDING CONSULTANTS INC.

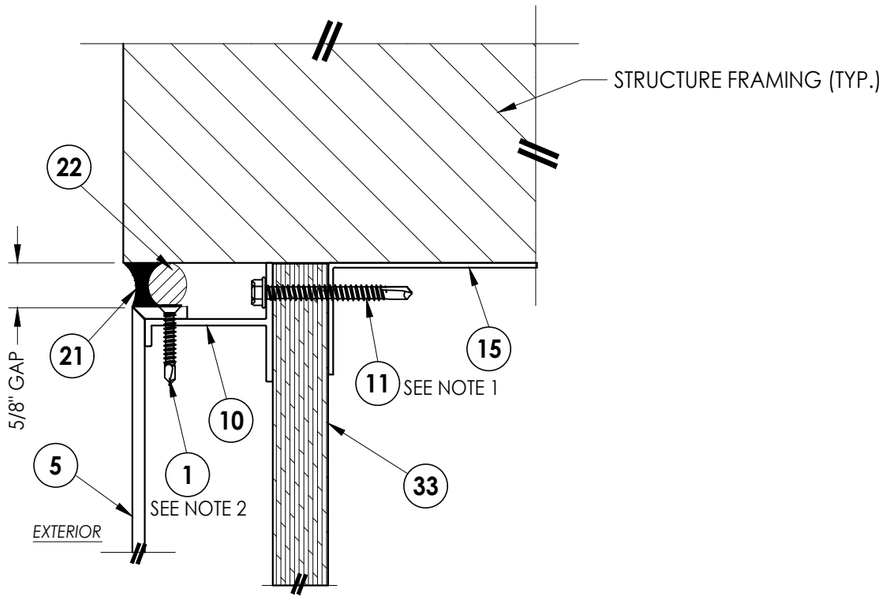

1/3 **VERTICAL CROSS SECTION**

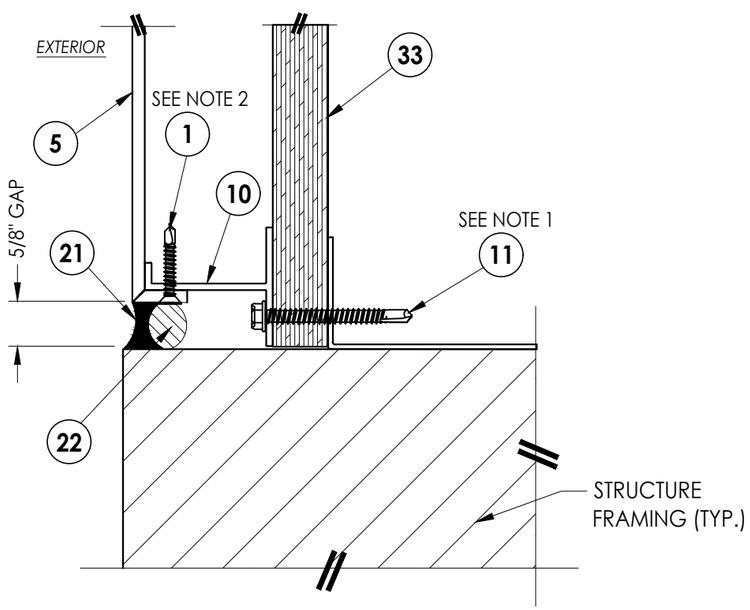

2/3 **VERTICAL CROSS SECTION**

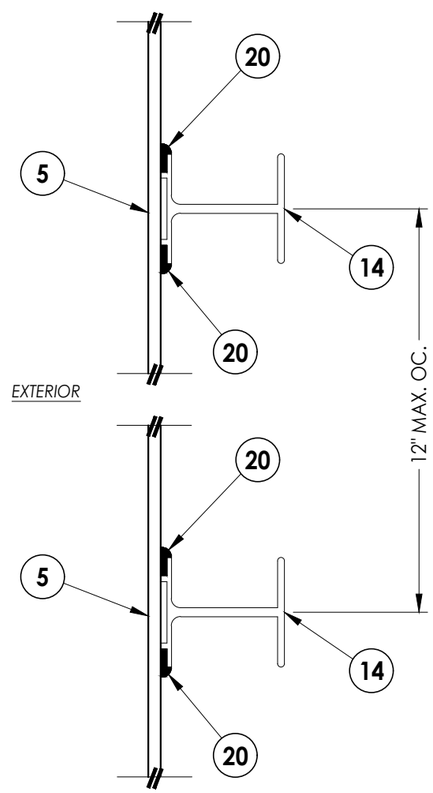

3/3 **VERTICAL CROSS SECTION**

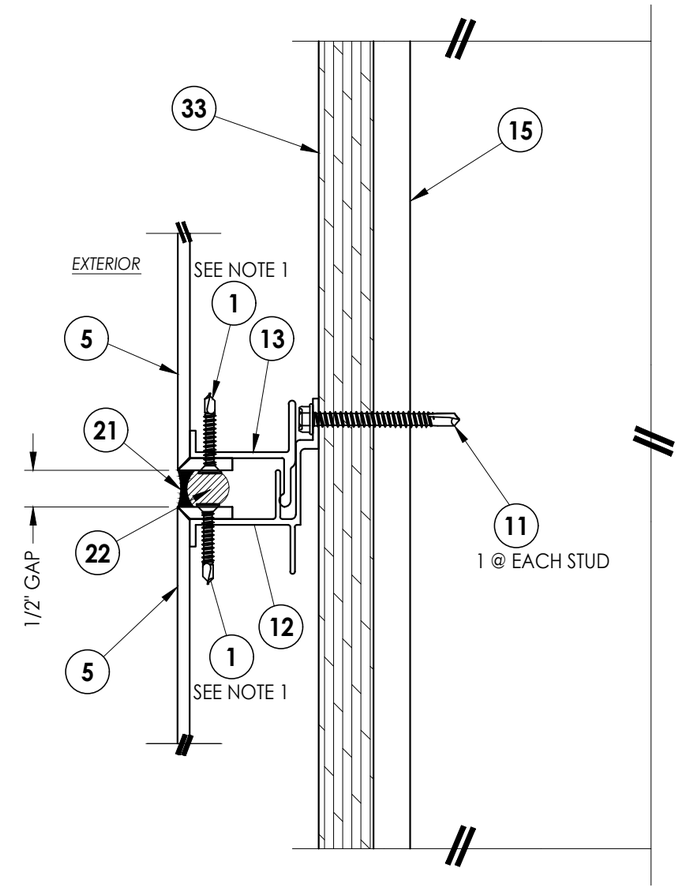

4/3 **VERTICAL CROSS SECTION**

NOTES:

1. SPACING FOR ITEM #11:
   3" & 14" FROM EACH END & 16" O.C. THEREAFTER.

2. SPACING FOR ITEM #1:
   1", 4" & 15" FROM EACH END & 16" O.C. THEREAFTER.

Documents Prepared By:
Lyndon F. Schmidt
P.E. No. 43409

RW BUILDING CONSULTANTS, INC.
P.O. Box 230, Valrico, FL 33595
Phone No.: 813.659.9197
FBPE Registry No. 9813

PRODUCT: QUALITY METALS, INC.

PART OR ASSEMBLY: VERTICAL CROSS SECTIONS

NO.	DATE	REVISIONS	BY
5	7/02/26	UPDATE TO 9TH ED. (2026) FBC	LFS
4	8/08/23	UPDATE TO 8TH ED. (2023) FBC	LFS
3	8/27/20	UPDATE TO 7TH ED. (2020) FBC	LFS
2	7/20/17	UPDATE TO 6TH ED. (2017) FBC	LFS
1	2/12/15	UPDATE TO 5TH ED. (2014) FBC	LFS

DATE: 2/18/14
SCALE: N.T.S.
DWG. BY: JK
CHK. BY: LFS
DRAWING NO.: FL-16849.2
SHEET 3 OF 5

© 2014 R.W. Building Consultants Inc.

Z:\2023 FBC Drawings\Quality Metals, Inc\FL-16849 R5\FL-16849.1-2.dwg

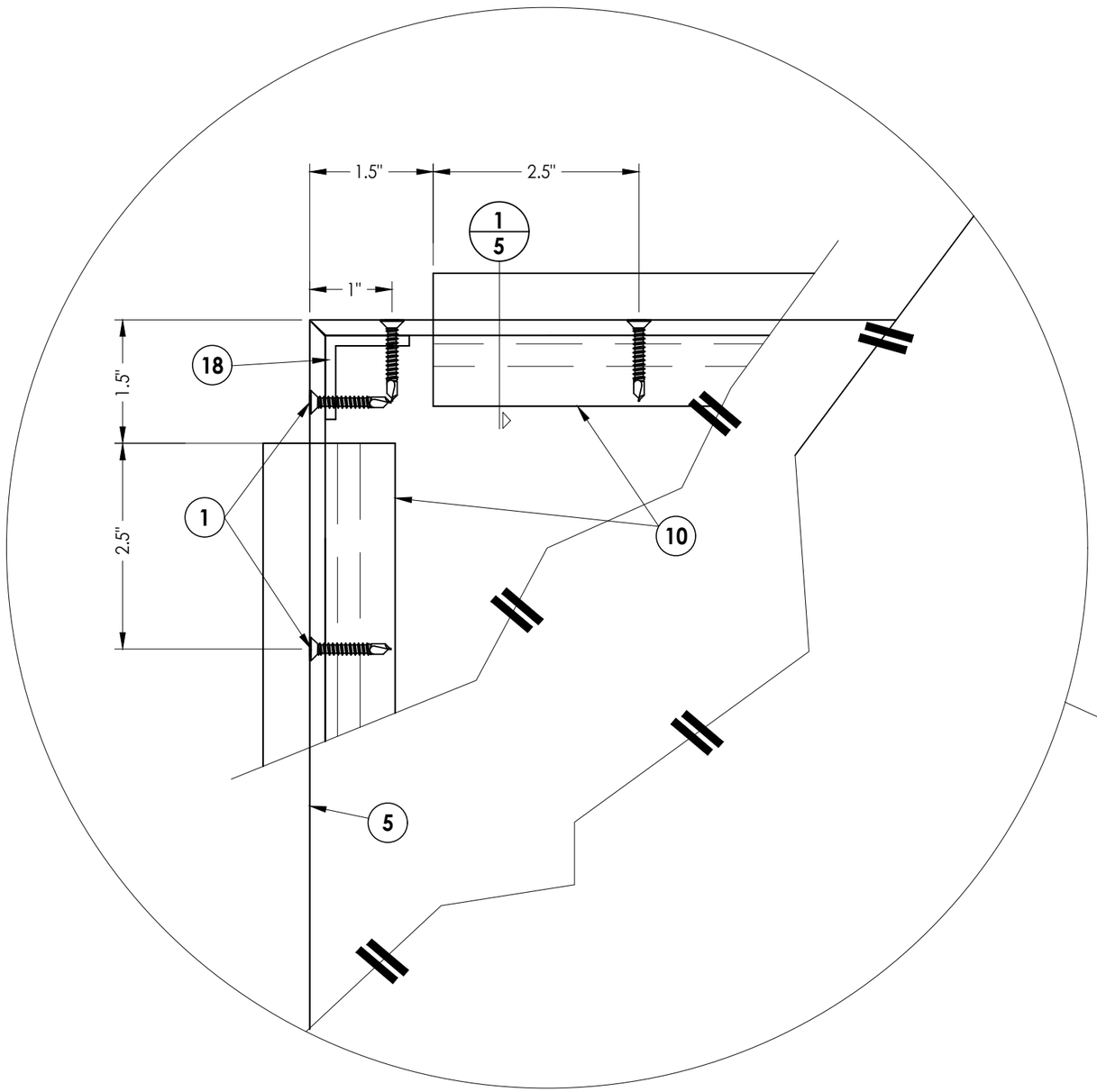

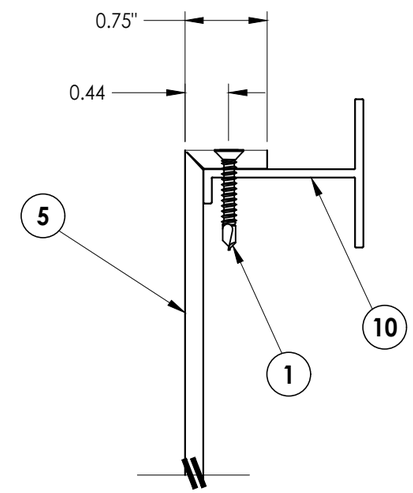

1/5 **PANEL TO TERMINATOR ATTACHMENT**

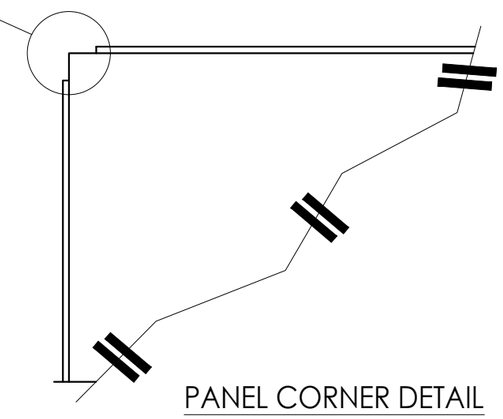

PANEL CORNER DETAIL

Documents Prepared By:
Lyndon F. Schmidt
P.E. No. 43409

RW BUILDING CONSULTANTS, INC.
P.O. Box 230, Valrico, FL 33595
Phone No.: 813.659.9197
FBPE Registry No. 9813

PRODUCT: QUALITY METALS, INC.

PART OR ASSEMBLY: PANEL DETAILS

NO.	DATE	REVISIONS	BY
5	7/02/26	UPDATE TO 9TH ED. (2026) FBC	LFS
4	8/08/23	UPDATE TO 8TH ED. (2023) FBC	LFS
3	8/27/20	UPDATE TO 7TH ED. (2020) FBC	LFS
2	7/20/17	UPDATE TO 6TH ED. (2017) FBC	LFS
1	2/12/15	UPDATE TO 5TH ED. (2014) FBC	LFS

DATE: 2/18/14
SCALE: N.T.S.
DWG. BY: JK
CHK. BY: LFS
DRAWING NO.: FL-16849.2
SHEET 4 OF 5

© 2014 R.W. Building Consultants Inc.

Z:\2023 FBC Drawings\Quality Metals, Inc\FL-16849 R5\FL-16849.1-2.dwg

BILL OF MATERIALS		
ITEM #	DESCRIPTION	MATERIAL
1	#10-16 X 1" PFH TEK SCREW	STEEL
2	#8-18 X 1" PFH TEK SCREW	STEEL
4	#8 X 1-3/4" PPH WS	STEEL
5	4mm ALUMINUM COMPOSITE PANEL (ALPOLIC OR REYNOBOND)	ACM
10	TERMINATOR EXTRUSION	6063-T6 ALUM
11	#12-14 X 2" HWH TEK SCREW	STEEL
12	FEMALE EXTRUSION	6063-T6 ALUM
13	MALE EXTRUSION	6063-T6 ALUM
14	STIFFENER	6063-T6 ALUM
15	METAL STUD (16 GA.) **	STEEL
16	HEADER AND SILL PLATE (16 GA.)	STEEL
18	1" CORNER BRACKET	6063-T6 ALUM
20	DOW 1199 SILICONE	-
21	DOW 795 SEALANT	-
22	FOAM BACKER ROD	-
24	METAL CAP (18 GA.)	STEEL
33	5/8" PLYWOOD OR DensGlass® (Georgia-Pacific)	-

**SEE GENERAL NOTE 4, SHEET 1

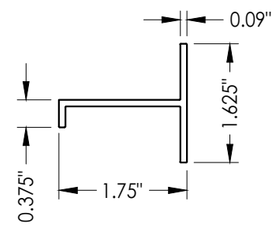

10 TERMINATOR EXTRUSION

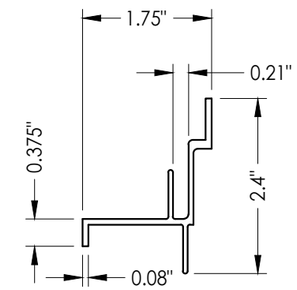

12 FEMALE EXTRUSION

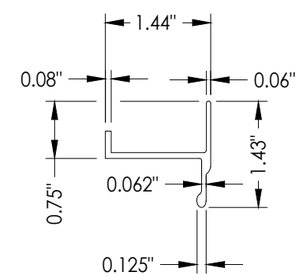

13 MALE EXTRUSION

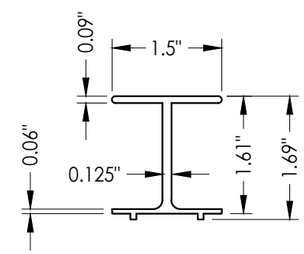

14 STIFFENER

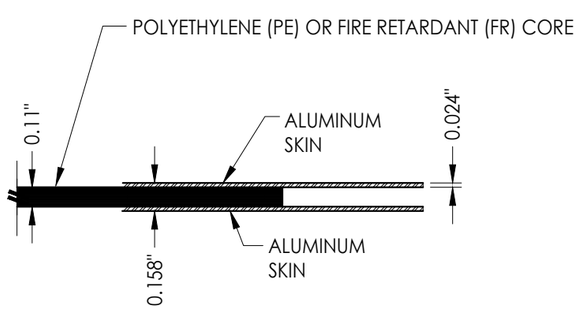

5 4mm PANEL
ALUMINUM COMPOSITE

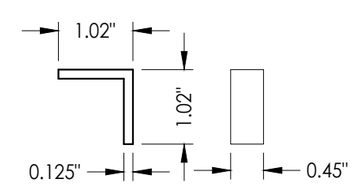

18 CORNER BRACKET

Documents Prepared By:
Lyndon F. Schmidt
P.E. No. 43409

RW BUILDING CONSULTANTS, INC.
P.O. Box 230, Valrico, FL 33595
Phone No.: 813.659.9197
FBPE Registry No. 9813

PRODUCT: QUALITY METALS, INC.

PART OR ASSEMBLY: BILL OF MATERIALS & COMPONENTS

NO.	DATE	REVISIONS	BY
5	7/02/26	UPDATE TO 9TH ED. (2026) FBC	LFS
4	8/08/23	UPDATE TO 8TH ED. (2023) FBC	LFS
3	8/27/20	UPDATE TO 7TH ED. (2020) FBC	LFS
2	7/20/17	UPDATE TO 6TH ED. (2017) FBC	LFS
1	2/12/15	UPDATE TO 5TH ED. (2014) FBC	LFS

DATE: 2/18/14
SCALE: N.T.S.
DWG. BY: JK
CHK. BY: LFS
DRAWING NO.: FL-16849.2
SHEET 5 OF 5

© 2014 R.W. BUILDING CONSULTANTS INC.

Z:\2023 FBC Drawings\Quality Metals, Inc\FL-16849 R5\FL-16849.1-2.dwg